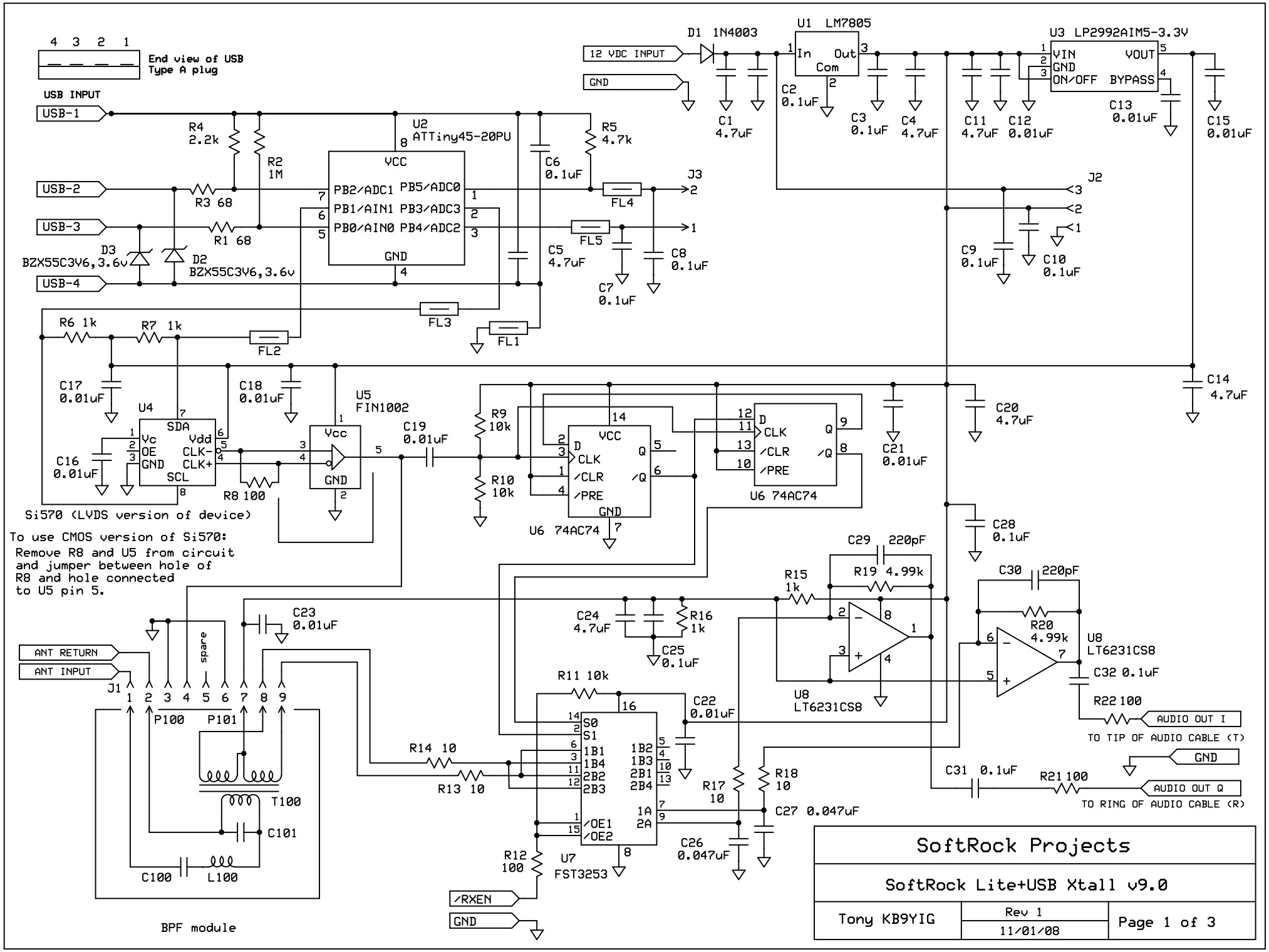
4 3 2 1
End view of USB Type A plug
USB INPUT
USB-1
USB-2
USB-3
USB-4
R4 2.2k
R2 1M
R3 68
R1 68
D3 BZX55C3V6,3.6v
D2 BZX55C3V6,3.6v
U2 ATTiny45-20PU
VCC
PB2/ADC1 PB5/ADC0
PB1/AIN1 PB3/ADC3
PB0/AIN0 PB4/ADC2
GND
R5 4.7k
C6 0.1uF
FL4
FL5
FL3
FL1
FL2
J3
C5 4.7uF
C7 0.1uF
C8 0.1uF
12 VDC INPUT
GND
D1 1N4003
U1 LM7805
In Out Com
C1 4.7uF
C2 0.1uF
C3 0.1uF
C4 4.7uF
U3 LP2992AIM5-3.3V
VIN GND ON/OFF
VOUT BYPASS
C11 4.7uF
C12 0.01uF
C13 0.01uF
C15 0.01uF
J2
C9 0.1uF
C10 0.1uF
R6 1k
R7 1k
C17 0.01uF
C18 0.01uF
U4
SDA
Vc OE GND
Vdd CLK- CLK+
SCL
C16 0.01uF
R8 100
U5 FIN1002
Vcc
GND
C19 0.01uF
Si570 (LVDS version of device)
To use CMOS version of Si570:
Remove R8 and U5 from circuit
and jumper between hole of
R8 and hole connected
to U5 pin 5.
R9 10k
R10 10k
D CLK /CLR /PRE Q /Q
U6 74AC74
C21 0.01uF
C20 4.7uF
C14 4.7uF
C28 0.1uF
C29 220pF
R19 4.99k
R15 1k
C30 220pF
R20 4.99k
U8 LT6231CS8
C32 0.1uF
R22 100
AUDIO OUT I
TO TIP OF AUDIO CABLE (T)
C31 0.1uF
R21 100
AUDIO OUT Q
TO RING OF AUDIO CABLE (R)
C24 4.7uF
R16 1k
C25 0.1uF
C23 0.01uF
ANT RETURN
ANT INPUT
J1
spare
P100 P101
T100
C101
C100
L100
BPF module
R11 10k
S0 S1
1B1 1B4 2B2 2B3
1B2 1B3 2B1 2B4
1A 2A
/OE1 /OE2
U7 FST3253
R14 10
R13 10
C22 0.01uF
R17 10
R18 10
C27 0.047uF
C26 0.047uF
R12 100
/RXEN
GND
SoftRock Projects
SoftRock Lite+USB Xtall v9.0
Tony KB9YIG
Rev 1
11/01/08
Page 1 of 3