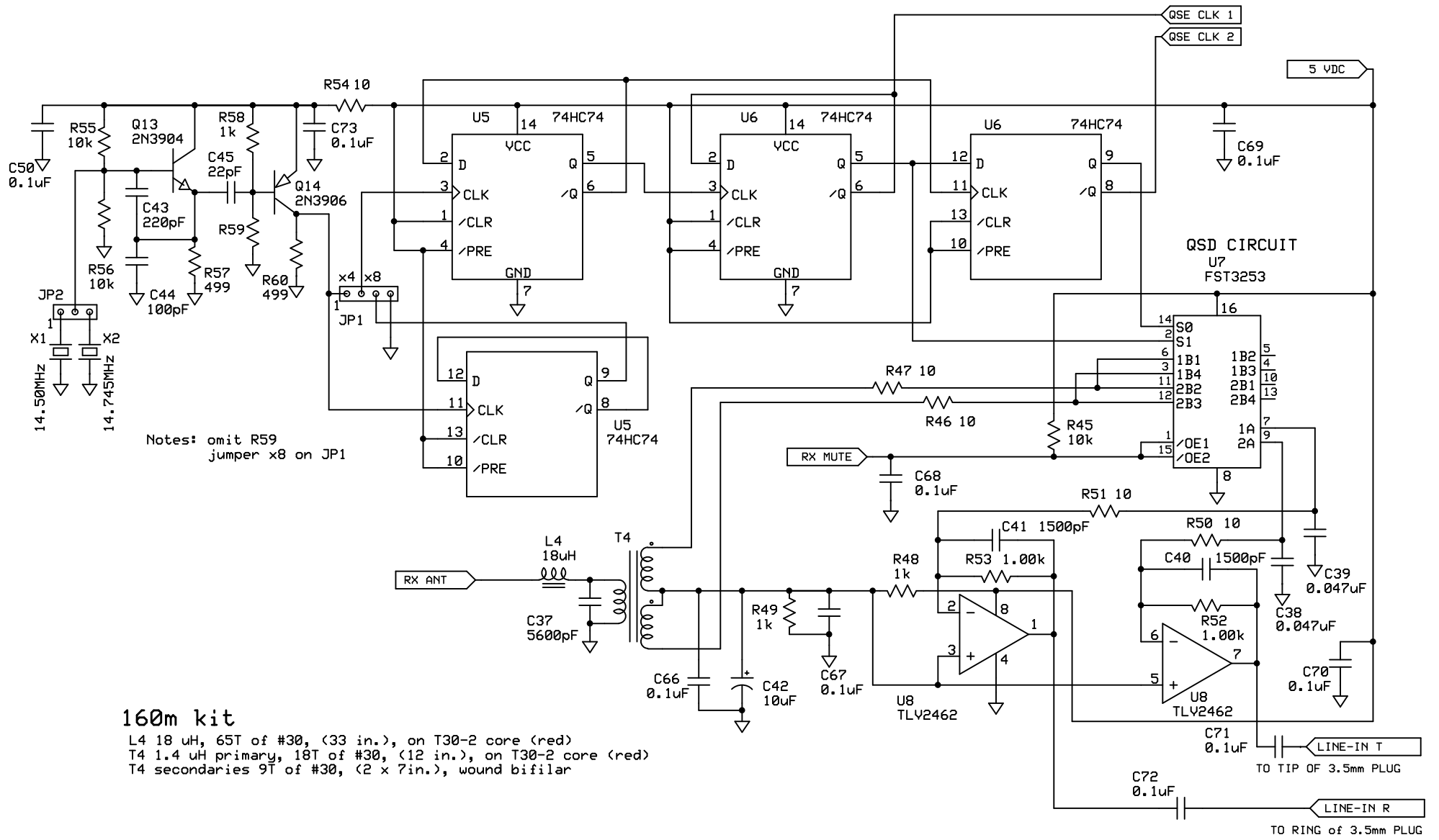

160m kit

L4 18 uH, 65T of #30, (33 in.), on T30-2 core (red)
T4 1.4 uH primary, 18T of #30, (12 in.), on T30-2 core (red)
T4 secondaries 9T of #30, (2 x 7in.), wound bifilar

Note: Components mounted to the bottom of the board include size 1206 SMT capacitors C50 through C73 and SOICs U1, U2, U3, U5, U6, U7 and U8

SoftRock Projects		
G0BBL-M0PUB-G8BTR 160m RXTXv6.2		
Tony KB9YIG	11/8/07	Page 2 of 2